IronRidge Roof Mount Products

ATTACHMENT DIMENSIONS

Flush Standoffs

Part Numbers	Diagram
29-6003-500 (3″) 29-6004-500 (4″) 29-6006-500 (6″) 29-6007-500 (7″)	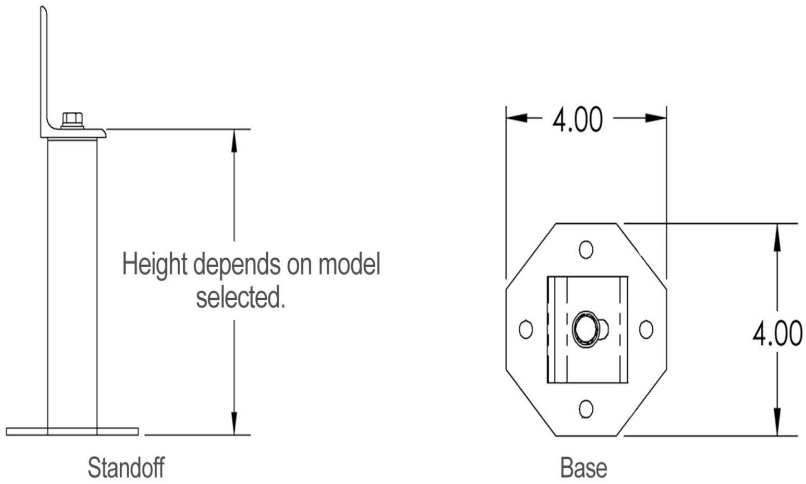

Notes: Flush mount standoffs come in four heights: 3″, 4″, 6″, and 7″

Tilt Standoffs

Part Numbers	Diagram
51-4004-00T (4″) 51-4006-00T (6″) 51-4009-00T (9″)	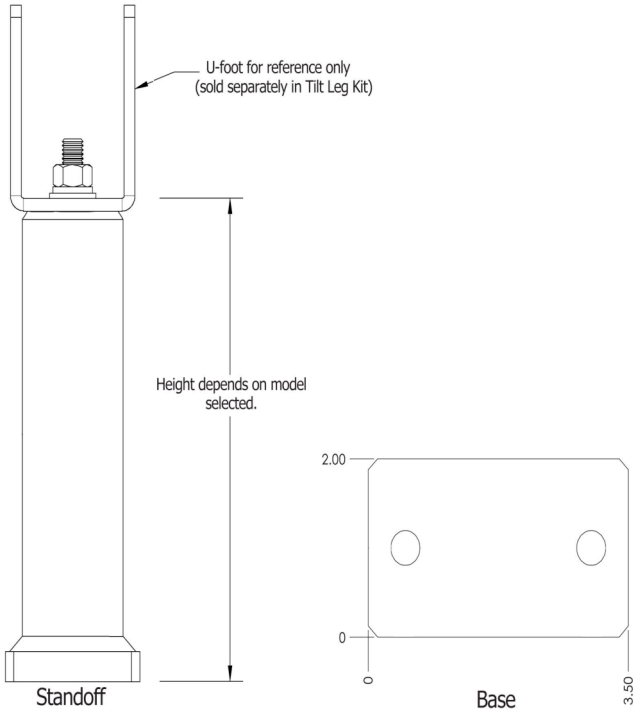

Notes: Tilt mount standoffs come in three heights: 4″, 6″, and 9″

ÉNERGIE MATRIX ENERGY

296 Labrosse Avenue, Pointe-Claire, QC, H9R 5L8, Canada
Phone: (514) 630-5630 Fax: (514) 426-9123
Toll Free: 1-866-630-5630 email: info@matrixenergy.ca
For more information visit www.matrixenergy.ca

ENERGY STAR PARTNER

Tilt Leg Kits

Part Numbers	Diagram
29-7210-010 (10”) 29-7215-015 (15”) 29-7220-020 (20”) 29-7225-025 (25”) 29-7230-030 (30”) 29-7240-040 (40”)	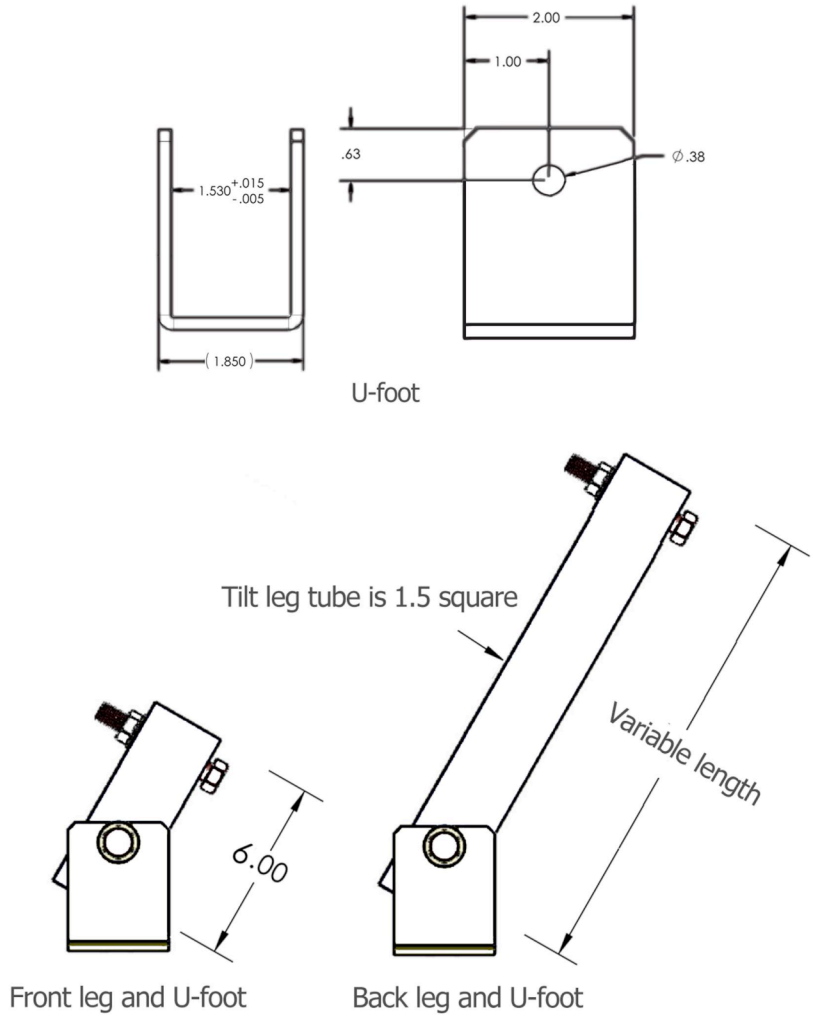

Notes: Tilt legs are 1.5” square tubing. The front leg is always 6” in length, but the back leg is variable as shown below, based on the model.

ÉNERGIE MATRIX ENERGY

296 Labrosse Avenue, Pointe-Claire, QC, H9R 5L8, Canada
Phone: (514) 630-5630 Fax: (514) 426-9123
Toll Free: 1-866-630-5630 email: info@matrixenergy.ca
For more information visit www.matrixenergy.ca

ENERGY STAR PARTNER

L-feet

Part Numbers	Diagram
29-7000-017	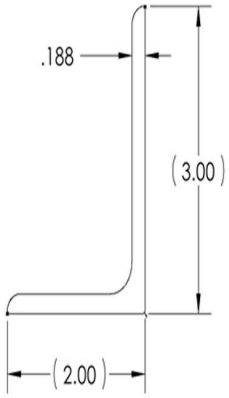 L-Foot 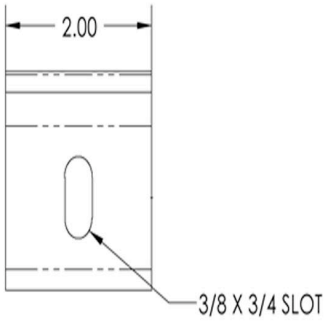 Base

Notes: IronRidge L-feet are adjustable in height using the vertical slot in the diagram above.

Ralls

Part Numbers	Diagram
XRS 51-7000-XXX XRL 51-6000-XXX	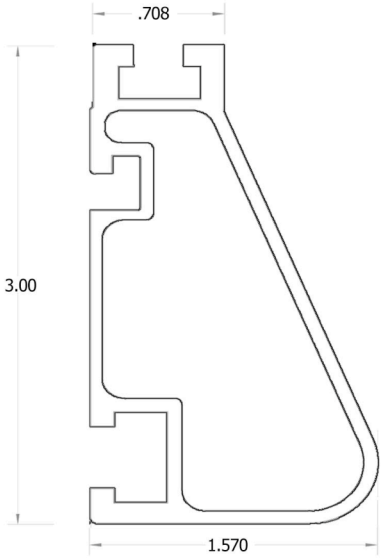 XRS 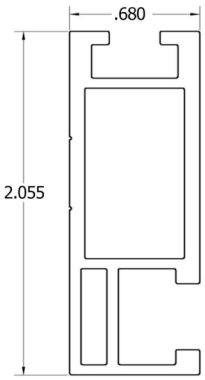 XRL

ÉNERGIE MATRIX ENERGY

296 Labrosse Avenue, Pointe-Claire, QC, H9R 5L8, Canada
Phone: (514) 630-5630 Fax: (514) 426-9123
Toll Free: 1-866-630-5630 email: info@matrixenergy.ca
For more information visit www.matrixenergy.ca

ENERGY STAR PARTNER